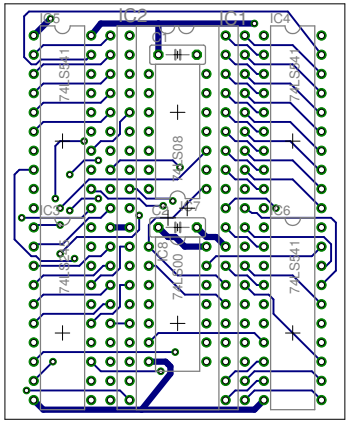

04.02.15 17:49 /home/uwe/eagle/Z1013-Buspuffer/Z1013-Buspuffer.brd